REBELLE
ARCHITECTURAL
LIGHTING

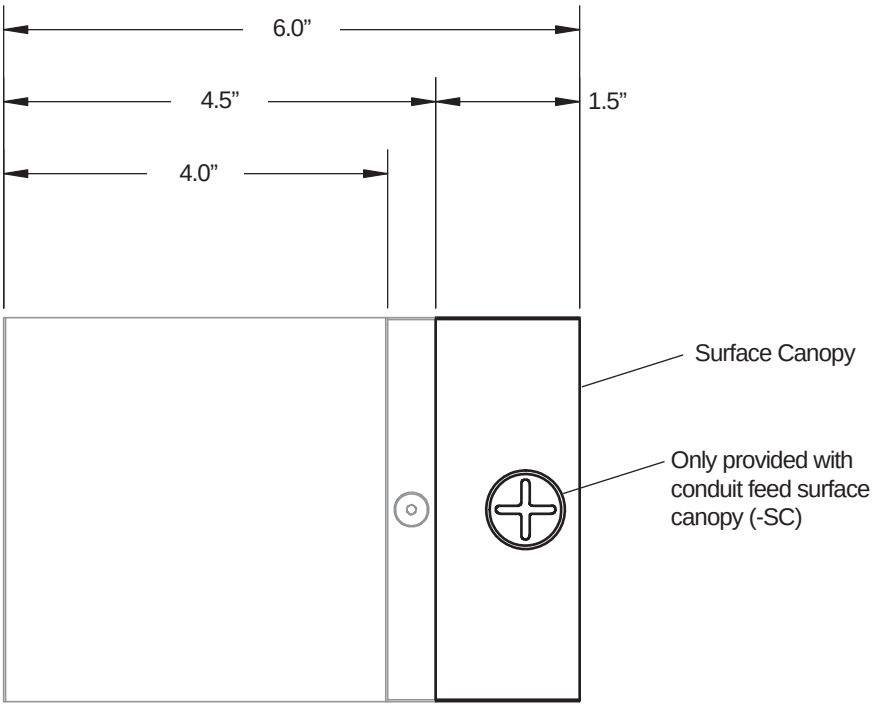

Tessera Surface Canopy Option (For Use with 3100, 3101, 3103, 3121)

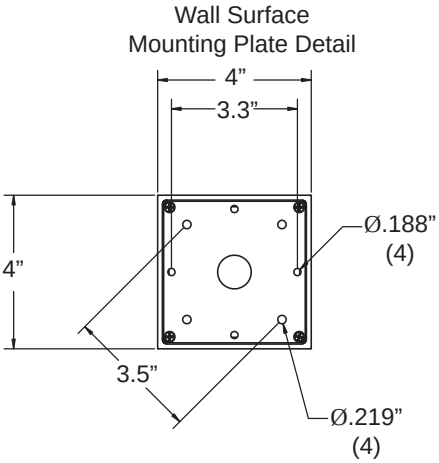

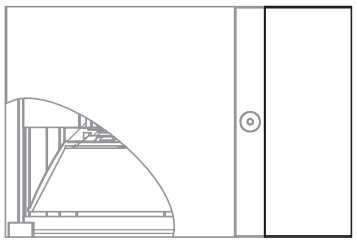

Surface Wiring Canopy (-SC1)
Extruded Aluminum, Painted to Match
Driver Housing, for mounting installations
with no J-Box or incorrect size J-Box
Suitable for Ceiling and
Wall Mount Installations

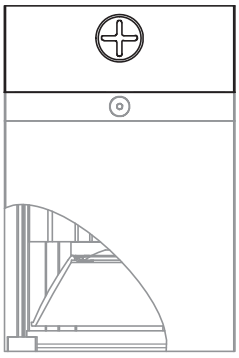

Surface Wiring Conduit Feed Canopy (-SC)
Extruded Aluminum, Painted to Match
Suitable for 1/2” Conduit Feed (No J-Box Required)
2 Locations, Opposing Sides
Driver Housing
Suitable for Ceiling and Wall Mount Installations

© 2017 REBELLE All rights reserved. R17 Specifications subject to change without notice.